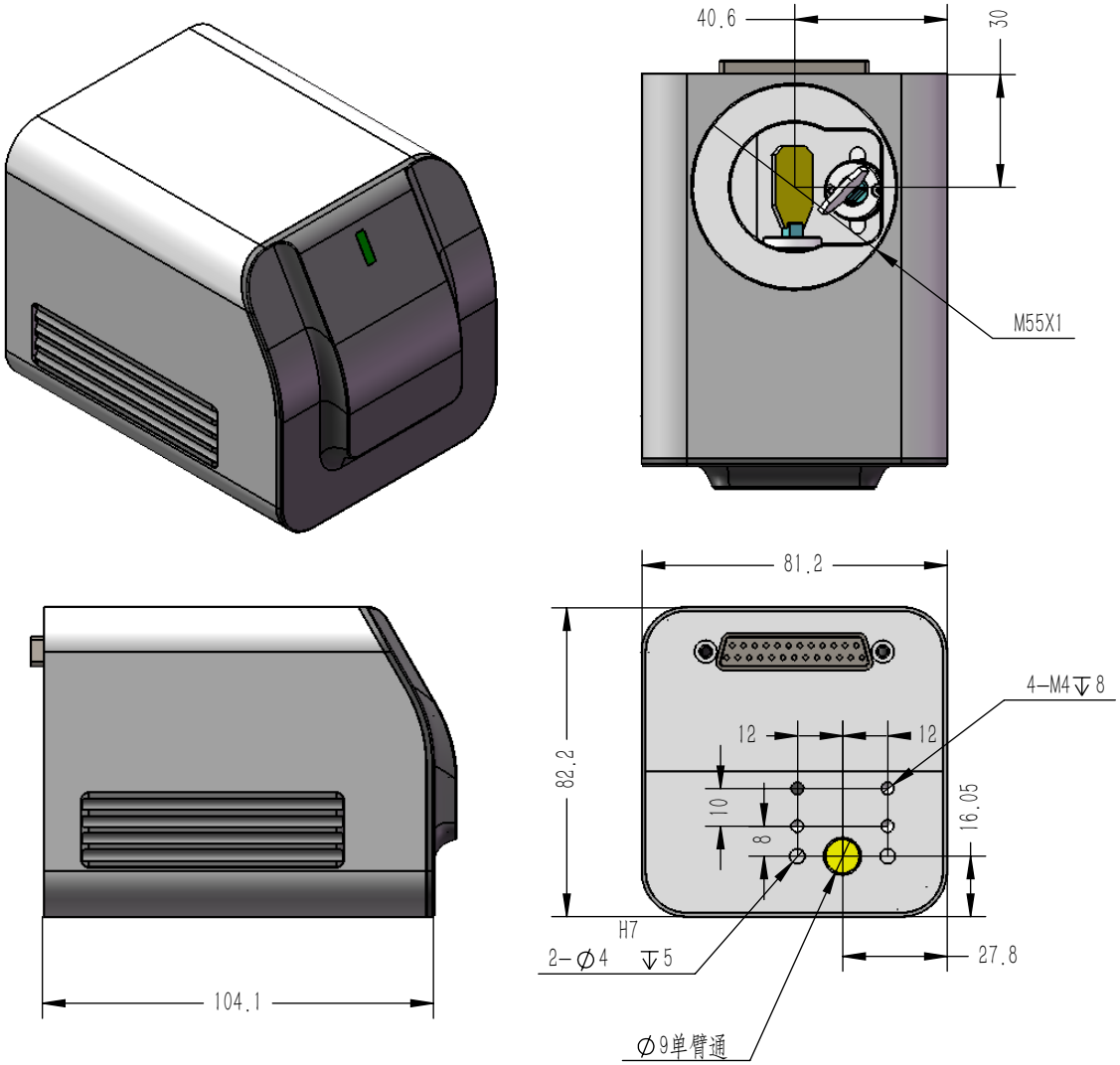
40.6
30
M55X1
81.2
4-M4↧8
12
12
82.2
10
8
16.05
H7
2-∅4 ↧5
27.8
∅9单臂通
104.1